UNIVERSITY OF CAMBRIDGE INTERNATIONAL EXAMINATIONS
General Certificate of Education Advanced Level

CANDIDATE NAME

CENTRE NUMBER

CANDIDATE NUMBER

5990541571

PHYSICS **9702/41**

Paper 4 A2 Structured Questions **May/June 2011**

2 hours

Candidates answer on the Question Paper.

No Additional Materials are required.

READ THESE INSTRUCTIONS FIRST

Write your Centre number, candidate number and name on all the work you hand in.
Write in dark blue or black pen.
You may use a soft pencil for any diagrams, graphs or rough working.
Do not use staples, paper clips, highlighters, glue or correction fluid.
DO **NOT** WRITE IN ANY BARCODES.

Answer **all** questions.
You may lose marks if you do not show your working or if you do not use appropriate units.

At the end of the examination, fasten all your work securely together.
The number of marks is given in brackets [ ] at the end of each question or part question.

For Examiner's Use	
1	
2	
3	
4	
5	
6	
7	
8	
9	
10	
11	
12	
Total	

This document consists of **22** printed pages and **2** blank pages.

© UCLES 2011

Data

speed of light in free space,	$c = 3.00 \times 10^{8}\ \text{m s}^{-1}$
permeability of free space,	$\mu_0 = 4\pi \times 10^{-7}\ \text{H m}^{-1}$
permittivity of free space,	$\varepsilon_0 = 8.85 \times 10^{-12}\ \text{F m}^{-1}$
elementary charge,	$e = 1.60 \times 10^{-19}\ \text{C}$
the Planck constant,	$h = 6.63 \times 10^{-34}\ \text{J s}$
unified atomic mass constant,	$u = 1.66 \times 10^{-27}\ \text{kg}$
rest mass of electron,	$m_e = 9.11 \times 10^{-31}\ \text{kg}$
rest mass of proton,	$m_p = 1.67 \times 10^{-27}\ \text{kg}$
molar gas constant,	$R = 8.31\ \text{J K}^{-1}\ \text{mol}^{-1}$
the Avogadro constant,	$N_A = 6.02 \times 10^{23}\ \text{mol}^{-1}$
the Boltzmann constant,	$k = 1.38 \times 10^{-23}\ \text{J K}^{-1}$
gravitational constant,	$G = 6.67 \times 10^{-11}\ \text{N m}^2\ \text{kg}^{-2}$
acceleration of free fall,	$g = 9.81\ \text{m s}^{-2}$

© UCLES 2011

Formulae

uniformly accelerated motion, $s = ut + \frac{1}{2}at^2$
$v^2 = u^2 + 2as$

work done on/by a gas, $W = p\Delta V$

gravitational potential, $\phi = -\frac{Gm}{r}$

hydrostatic pressure, $p = \rho gh$

pressure of an ideal gas, $p = \frac{1}{3}\frac{Nm}{V}\langle c^2 \rangle$

simple harmonic motion, $a = -\omega^2 x$

velocity of particle in s.h.m., $v = v_0 \cos \omega t$
$v = \pm \omega \sqrt{(x_0^2 - x^2)}$

electric potential, $V = \frac{Q}{4\pi\varepsilon_0 r}$

capacitors in series, $1/C = 1/C_1 + 1/C_2 + \ldots$

capacitors in parallel, $C = C_1 + C_2 + \ldots$

energy of charged capacitor, $W = \frac{1}{2}QV$

resistors in series, $R = R_1 + R_2 + \ldots$

resistors in parallel, $1/R = 1/R_1 + 1/R_2 + \ldots$

alternating current/voltage, $x = x_0 \sin \omega t$

radioactive decay, $x = x_0 \exp(-\lambda t)$

decay constant, $\lambda = \frac{0.693}{t_{\frac{1}{2}}}$

© UCLES 2011

[Turn over

Section A

Answer **all** the questions in the spaces provided.

1 **(a)** Newton's law of gravitation applies to point masses.

(i) State Newton's law of gravitation.

.....

.....

.....[2]

(ii) Explain why, although the planets and the Sun are not point masses, the law also applies to planets orbiting the Sun.

.....

.....[1]

(b) Gravitational fields and electric fields show certain similarities and certain differences. State one aspect of gravitational and electric fields where there is

(i) a similarity,

.....

.....[1]

(ii) a difference.

.....

.....

.....[2]

© UCLES 2011

2 **(a)** State what is meant by the *Avogadro constant* N_A.

.....

.....

.....[2]

(b) A balloon is filled with helium gas at a pressure of 1.1×10^5 Pa and a temperature of 25 °C.
The balloon has a volume of 6.5×10^4 cm^3.
Helium may be assumed to be an ideal gas.

Determine the number of gas atoms in the balloon.

number = ... [4]

3 **(a)** Define *simple harmonic motion*.

.....

.....

.....[2]

(b) A tube, sealed at one end, has a total mass m and a uniform area of cross-section A. The tube floats upright in a liquid of density ρ with length L submerged, as shown in Fig. 3.1a.

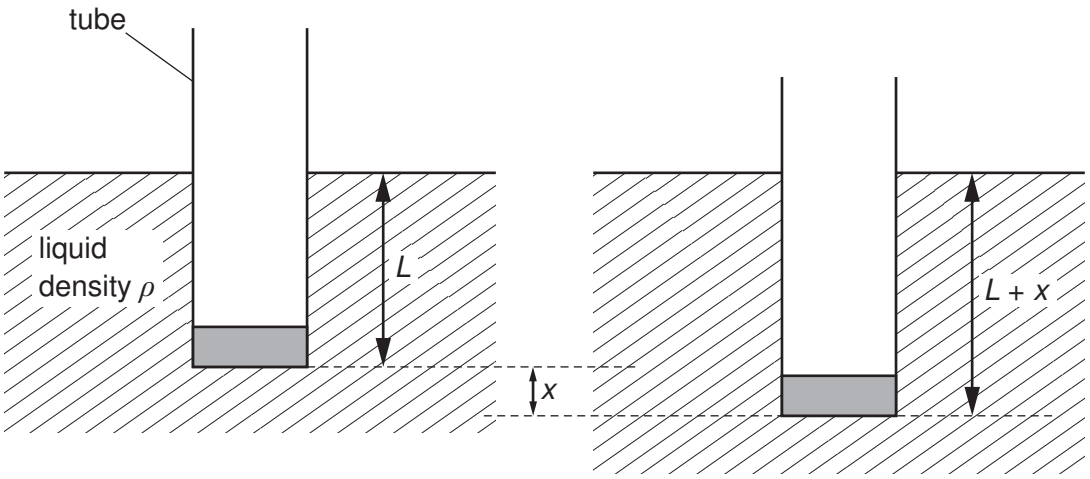

Fig. 3.1a **Fig. 3.1b**

The tube is displaced vertically and then released. The tube oscillates vertically in the liquid.
At one time, the displacement is x, as shown in Fig. 3.1b.

Theory shows that the acceleration a of the tube is given by the expression

$$a = -\frac{A\rho g}{m}x.$$

© UCLES 2011

(i) Explain how it can be deduced from the expression that the tube is moving with simple harmonic motion.

.....

.....

.....[2]

(ii) The tube, of area of cross-section $4.5\,cm^2$, is floating in water of density $1.0 \times 10^3\,kg\,m^{-3}$.

Calculate the mass of the tube that would give rise to oscillations of frequency 1.5 Hz.

mass = ... g [4]

4 **(a)** Define *electric potential* at a point.

.....

.....

.....[2]

(b) Two small spherical charged particles P and Q may be assumed to be point charges located at their centres. The particles are in a vacuum.

Particle P is fixed in position. Particle Q is moved along the line joining the two charges, as illustrated in Fig. 4.1.

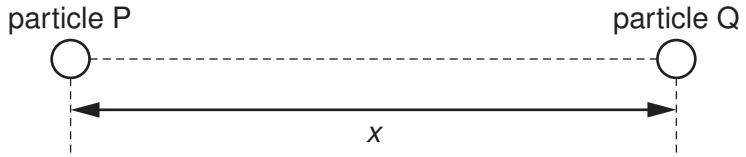

Fig. 4.1

The variation with separation x of the electric potential energy E_P of particle Q is shown in Fig. 4.2.

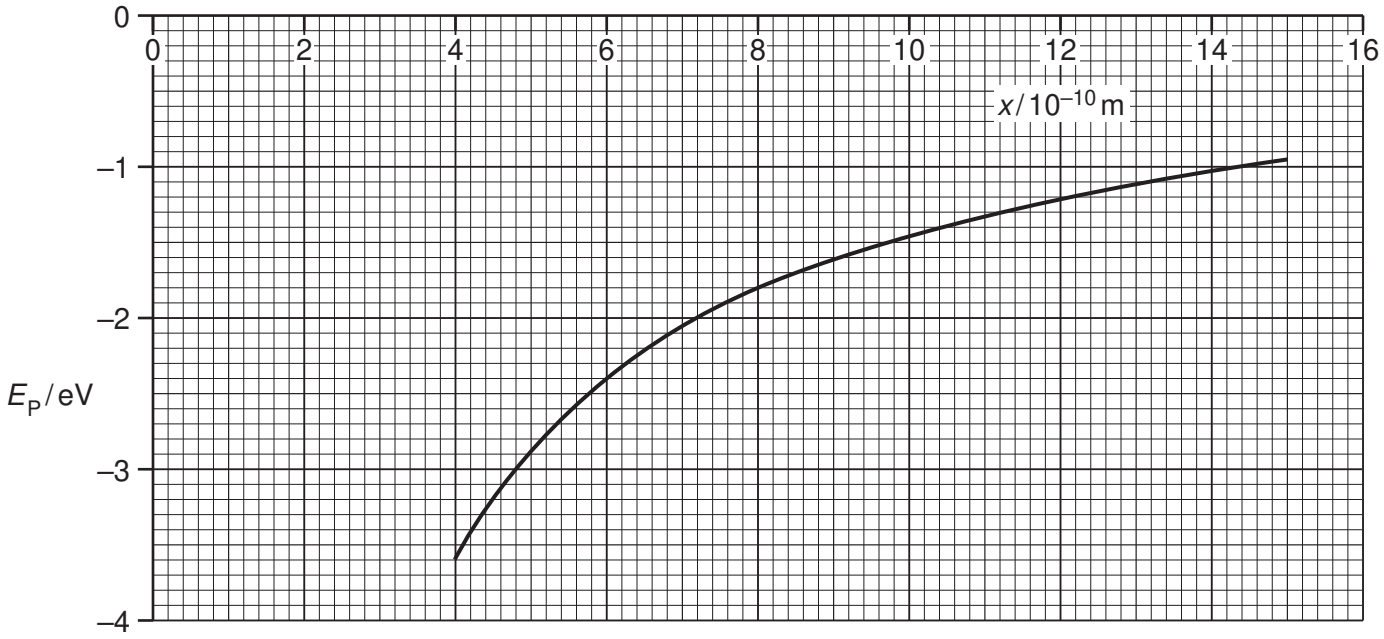

Fig. 4.2

(i) State how the magnitude of the electric field strength is related to potential gradient.

.....

.....[1]

(ii) Use your answer in **(i)** to show that the force on particle Q is proportional to the gradient of the curve of Fig. 4.2.

.....

.....

.....[2]

(c) The magnitude of the charge on each of the particles P and Q is 1.6×10^{-19} C. Calculate the separation of the particles at the point where particle Q has electric potential energy equal to –5.1 eV.

separation = ... m [4]

(d) By reference to Fig. 4.2, state and explain

(i) whether the two charges have the same, or opposite, sign,

.....

.....

.....[2]

(ii) the effect, if any, on the shape of the graph of doubling the charge on particle P.

.....

.....

.....[2]

5 **(a)** State what is meant by a *magnetic field*.

.....

.....

.....[2]

(b) A charged particle of mass m and charge $+q$ is travelling with velocity v in a vacuum. It enters a region of uniform magnetic field of flux density B, as shown in Fig. 5.1.

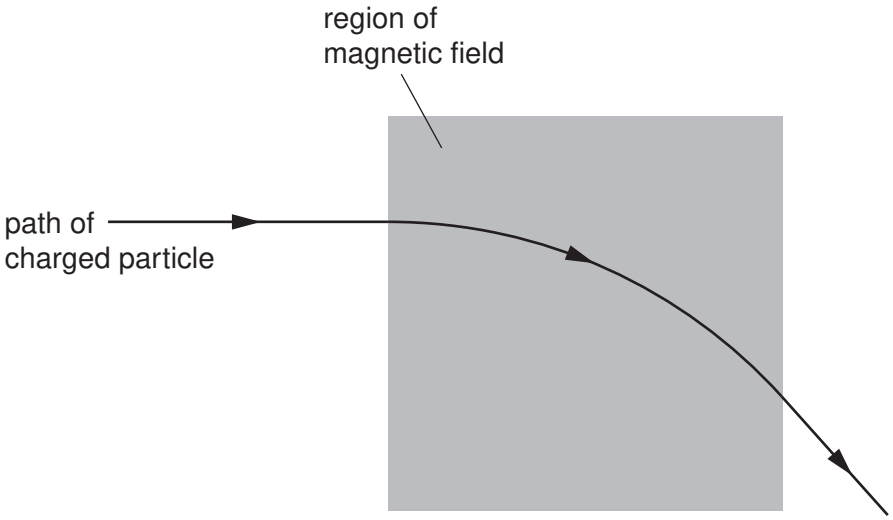

Fig. 5.1

The magnetic field is normal to the direction of motion of the particle. The path of the particle in the field is the arc of a circle of radius r.

(i) Explain why the path of the particle in the field is the arc of a circle.

.....

.....

.....

.....[2]

(ii) Show that the radius r is given by the expression

$$r = \frac{mv}{Bq}.$$

[2]

(c) A thin metal foil is placed in the magnetic field in **(b)**.
A second charged particle enters the region of the magnetic field. It loses kinetic energy as it passes through the foil. The particle follows the path shown in Fig. 5.2.

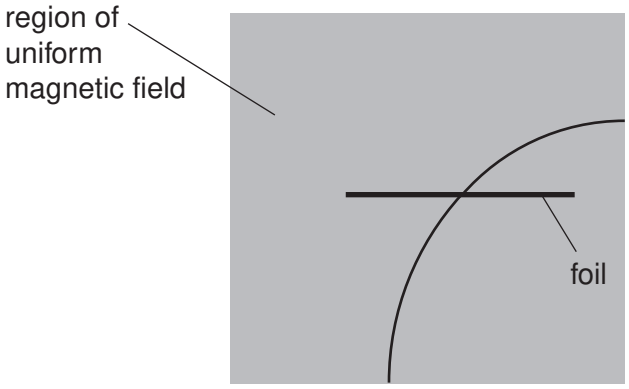

Fig. 5.2

(i) On Fig. 5.2, mark with an arrow the direction of travel of the particle. [1]

(ii) The path of the particle has different radii on each side of the foil.
The radii are 7.4 cm and 5.7 cm.
Determine the ratio

$$\frac{\text{final momentum of particle}}{\text{initial momentum of particle}}$$

for the particle as it passes through the foil.

ratio = ... [2]

6 A transformer is illustrated in Fig. 6.1.

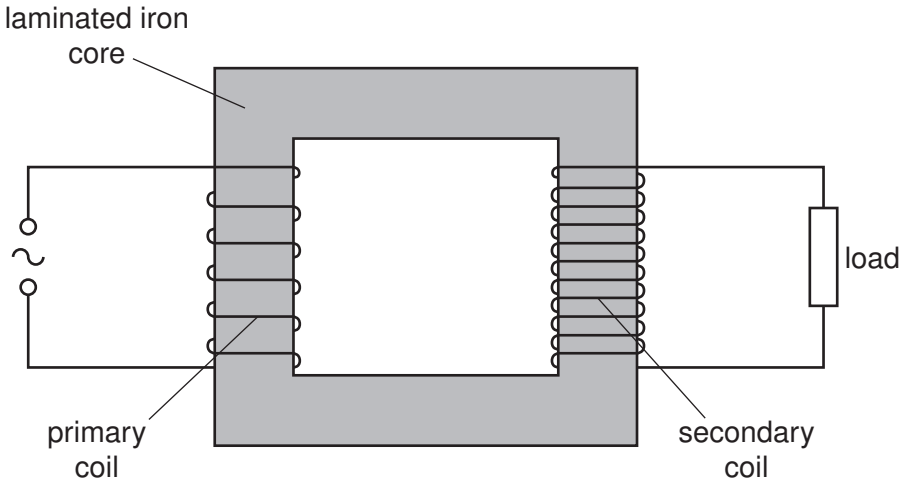

Fig. 6.1

(a) (i) Explain why the coils are wound on a core made of iron.

.....

.....[1]

(ii) Suggest why thermal energy is generated in the core.

.....

.....

.....[2]

(b) (i) State Faraday's law of electromagnetic induction.

.....

.....

.....[2]

(ii) Use Faraday's law to explain why the potential difference across the load and the e.m.f. of the supply are not in phase.

.....

.....

.....

.....[2]

© UCLES 2011

(c) Electrical energy is usually transmitted using alternating current. Suggest why the transmission is achieved using

(i) high voltages,

.....

.....

.....[2]

(ii) alternating current.

.....

.....[1]

7 Experiments are conducted to investigate the photoelectric effect.

(a) It is found that, on exposure of a metal surface to light, either electrons are emitted immediately or they are not emitted at all.

Suggest why this observation does not support a wave theory of light.

.....

.....

.....

.....[3]

(b) Data for the wavelength λ of the radiation incident on the metal surface and the maximum kinetic energy E_K of the emitted electrons are shown in Fig. 7.1.

λ/nm	$E_K/10^{-19}$J
650	–
240	4.44

Fig. 7.1

(i) Without any calculation, suggest why no value is given for E_K for radiation of wavelength 650 nm.

.....

.....[1]

(ii) Use data from Fig. 7.1 to determine the work function energy of the surface.

work function energy = ... J [3]

© UCLES 2011

(c) Radiation of wavelength 240 nm gives rise to a maximum photoelectric current I.
The intensity of the incident radiation is maintained constant and the wavelength is now reduced.

State and explain the effect of this change on

(i) the maximum kinetic energy of the photoelectrons,

.....

.....

.....[2]

(ii) the maximum photoelectric current I.

.....

.....

.....[2]

8 **(a)** The variation with nucleon number A of the binding energy per nucleon B_E of nuclei is shown in Fig. 8.1.

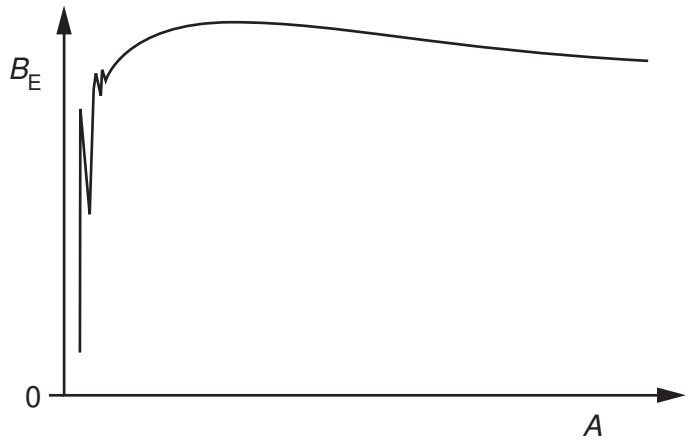

Fig. 8.1

On Fig. 8.1, mark the approximate positions of

(i) iron-56 (label this point Fe), [1]

(ii) zirconium-97 (label this point Zr), [1]

(iii) hydrogen-2 (label this point H). [1]

(b) **(i)** State what is meant by *nuclear fission*.

.....

.....

.....[2]

(ii) By reference to Fig. 8.1, explain how fission is energetically possible.

.....

.....

.....

.....[2]

© UCLES 2011

BLANK PAGE

Please turn over for Section B.

Section B

Answer **all** the questions in the spaces provided.

9 **(a)** An operational amplifier (op-amp) may be used as a comparator.
State the function of a comparator.

.....

.....

.....[2]

(b) The variation with temperature θ of the resistance R of a thermistor is shown in Fig. 9.1.

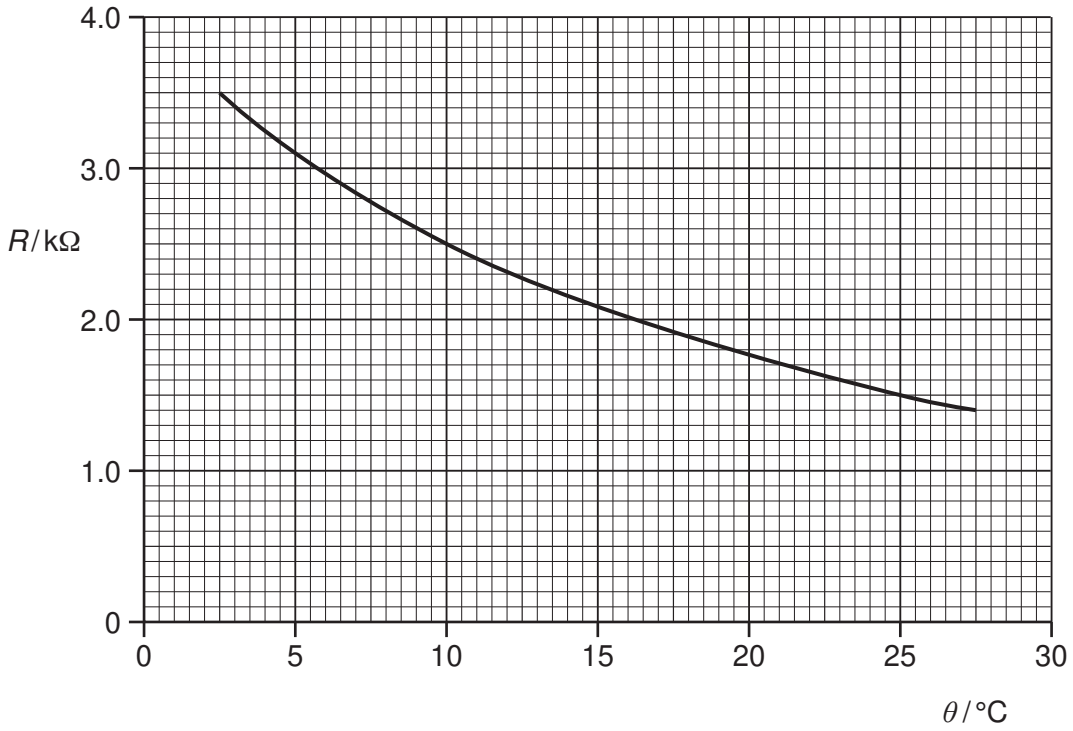

Fig. 9.1

The thermistor is connected into the circuit of Fig. 9.2.

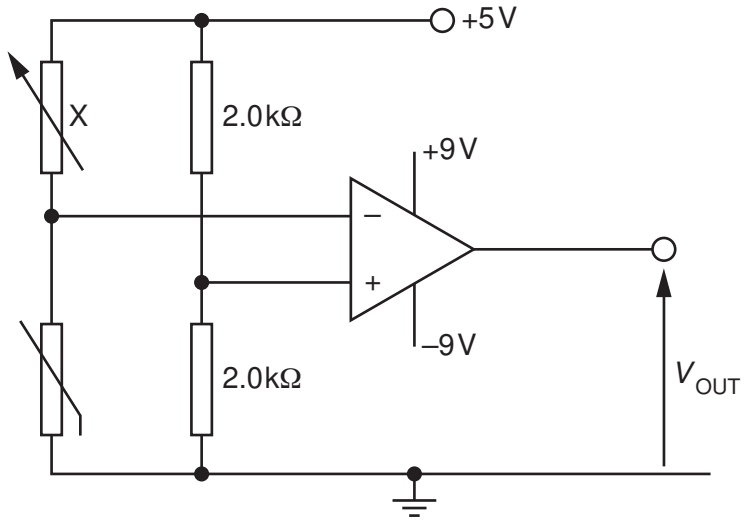

Fig. 9.2

The op-amp may be considered to be ideal.

(i) The temperature of the thermistor is 10 °C.
Determine the resistance of the variable resistor X such that the output potential V_{OUT} is zero.

resistance = ... Ω [2]

(ii) The resistance of the resistor X is now held constant at the value calculated in **(i)**.
Describe the change in the output potential V_{OUT} as the temperature of the thermistor is changed from 5 °C to 20 °C.

.....

.....

.....

.....

.....[4]

© UCLES 2011

10 (a) State what is meant by the *acoustic impedance Z* of a medium.

.....

.....[1]

(b) Two media have acoustic impedances Z_1 and Z_2.
The intensity reflection coefficient α for the boundary between the two media is given by

$$\alpha = \frac{(Z_2 - Z_1)^2}{(Z_2 + Z_1)^2}.$$

Describe the effect on the transmission of ultrasound through a boundary where there is a large difference between the acoustic impedances of the two media.

.....

.....

.....

.....[3]

(c) Data for the acoustic impedance Z and the absorption coefficient μ for fat and for muscle are shown in Fig. 10.1.

	Z/kg m^{-2} s^{-1}	μ/m^{-1}
fat	1.3×10^6	48
muscle	1.7×10^6	23

Fig. 10.1

The thickness x of the layer of fat on an animal, as illustrated in Fig. 10.2, is to be investigated using ultrasound.

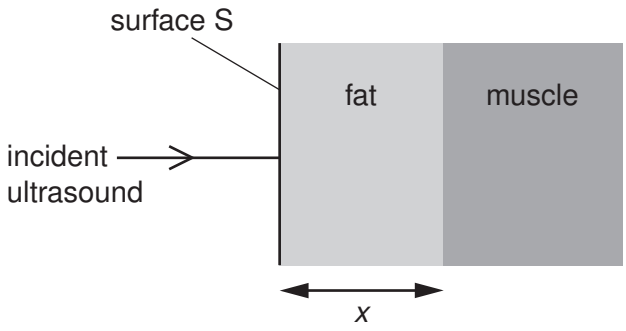

Fig. 10.2

The intensity of the parallel ultrasound beam entering the surface S of the layer of fat is I.
The beam is reflected from the boundary between fat and muscle.
The intensity of the reflected ultrasound detected at the surface S of the fat is 0.012 I.
Calculate

(i) the intensity reflection coefficient at the boundary between the fat and the muscle,

coefficient = ...[2]

(ii) the thickness x of the layer of fat.

x = ... cm [3]

11 **(a)** Describe what is meant by *frequency modulation* (*FM*).

.....

.....

.....[2]

(b) A sinusoidal carrier wave has a frequency of 600 kHz and an amplitude of 5.0 V.
The carrier wave is frequency modulated by a sinusoidal wave of frequency 7.0 kHz and amplitude 2.0 V.
The frequency deviation of the carrier wave is 20 kHz V^{-1}.

Determine, for the modulated carrier wave,

(i) the amplitude,

amplitude = ... V [1]

(ii) the maximum frequency,

maximum frequency = ... Hz [1]

(iii) the minimum frequency,

minimum frequency = ... Hz [1]

(iv) the number of times per second that the frequency changes from maximum to minimum and then back to maximum.

number = ...[1]

© UCLES 2011

12 Many television receivers are connected to an aerial using a coaxial cable. Such a cable is illustrated in Fig. 12.1.

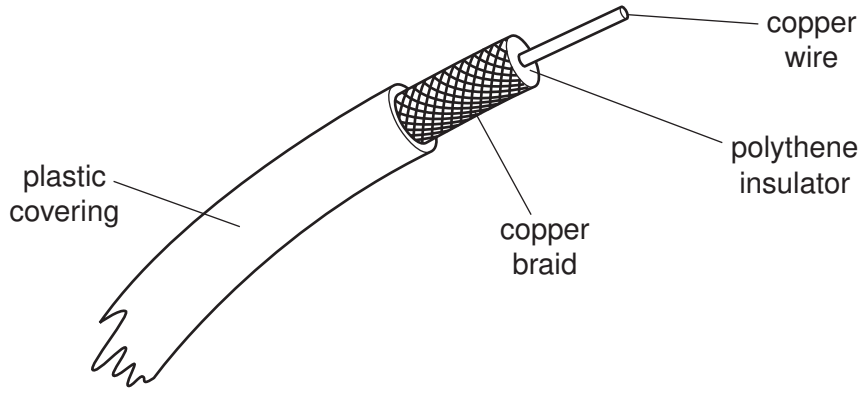

Fig. 12.1

(a) State two functions of the copper braid.

1. .....

.....

2. .....

.....

[2]

(b) Suggest two reasons why a coaxial cable is used, rather than a wire pair, to connect the aerial to the receiver.

1. .....

.....

2. .....

.....

[2]

(c) A coaxial cable has an attenuation per unit length of 200 dB km^{-1}.
The length of the co-axial cable between an aerial and the receiver is 12 m.
Calculate the ratio

$$\frac{\text{input signal power to coaxial cable}}{\text{output signal power from coaxial cable}}.$$

ratio = ...[3]

BLANK PAGE

Permission to reproduce items where third-party owned material protected by copyright is included has been sought and cleared where possible. Every reasonable effort has been made by the publisher (UCLES) to trace copyright holders, but if any items requiring clearance have unwittingly been included, the publisher will be pleased to make amends at the earliest possible opportunity.

University of Cambridge International Examinations is part of the Cambridge Assessment Group. Cambridge Assessment is the brand name of University of Cambridge Local Examinations Syndicate (UCLES), which is itself a department of the University of Cambridge.

© UCLES 2011